A40 (40 mm center distance)

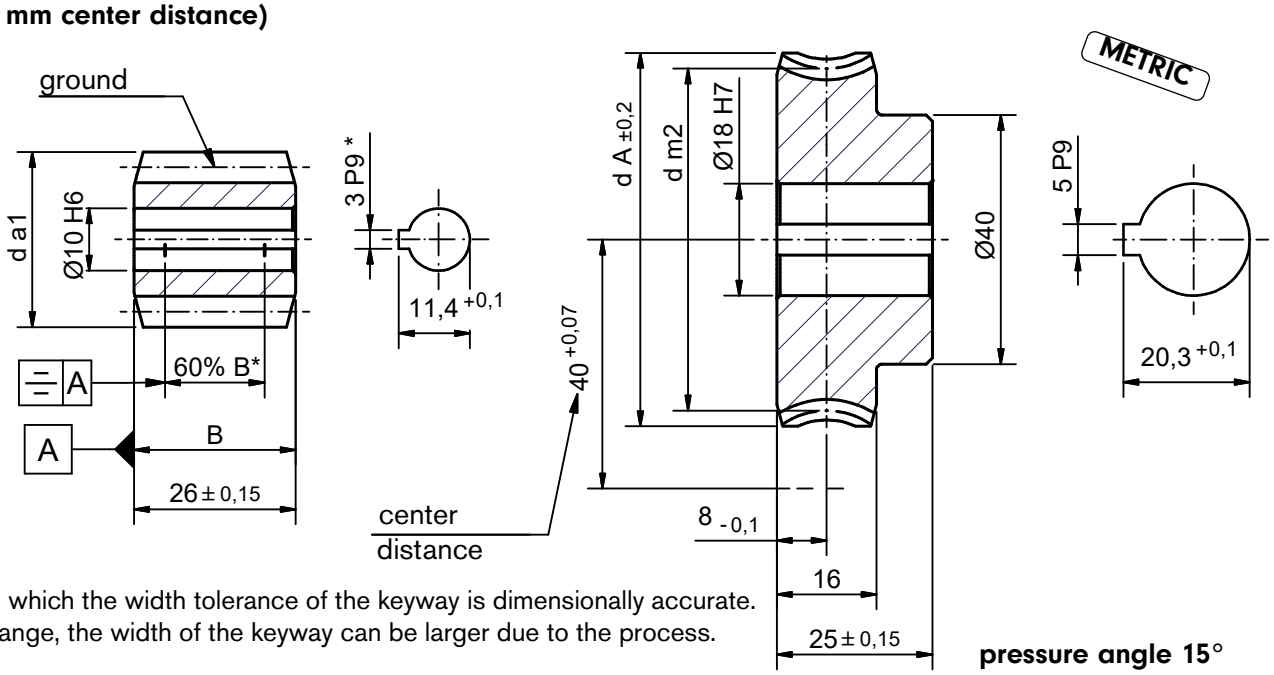

*Range within which the width tolerance of the keyway is dimensionally accurate. Outside this range, the width of the keyway can be larger due to the process.

pressure angle 15°

i = gear ratio
γ_m = lead angle m
m = module
z_1 = number of threads (worm)
d_{m1} = pitch diameter (worm)

d_{a1} = tip diameter (worm)
z_2 = No. of teeth (worm gear)
d_{m2} = pitch diameter (worm gear)
d_A = max. diameter (worm gear)
T_2 = output torque

MG = mineral grease
MO = mineral oil / synthetic grease
SO = synthetic oil

Catalog.				worm			wormgear			T_2 [Nm]No. Brass		
	i	γ_m	m	z_1	d_{m1}	d_{a1}	z_2	d_{m2}	d_A	MF	MO	SO
A40U7	6,75:1	21°19'	2	4	22	26	27	58	64	29,5	35,4	44,2
A40U8	8:1	16°35'	2,25	3	23,64	28,14	24	56,36	62,5	27,5	33	41,2
A40U10	10:1	16°1'	1,9	3	20,66	24,46	30	59,34	65	29,5	35,4	44,2
A40U12	12:1	10°21'	1,5	3	25,05	28,05	36	54,95	60	25,2	30,2	37,8
A40U15	15:1	9°53'	1,9	2	22,14	25,94	30	57,86	64	28	33,6	42
A40U20	20:1	8°59'	1,5	2	19,2	22,2	40	60,8	66	28,9	34,6	43,3
A40U25	25:1	5°58'	1,15	2	22,15	24,45	50	57,85	62	24,4	29,2	36,6
A40U28	28:1	4°47'	2	1	24	28	28	56	61,5	28,4	34	42,6
A40U30	30:1	5°50'	2	1	19,68	23,68	30	60,32	66	30,1	36,1	45,1
A40U35	35:1	5°26'	1,75	1	18,48	21,98	35	61,52	67	31	37,2	46,5
A40U36	36:1	3°19	1,5	1	25,91	28,91	36	54,09	59	23,9	28,6	35,8
A40U40	40:1	4°20'	1,5	1	19,83	22,83	40	60,17	65	28,3	33,9	42,4
A40U50	50:1	4°8'	1,25	1	17,3	19,8	50	62,7	68	27	32,4	40,5
A40U56	56:1	2°23'	1	1	24	26	56	56	59	21,9	26,2	32,8
A40U60	60:1	1°59'	0,9	1	25,92	27,72	60	54,08	57,5	19,3	23,1	28,9
A40U70	70:1	3°3'	0,9	1	16,91	18,71	70	63,09	67	24,1	28,9	36,1
A40U75	75:1	1°48'	0,75	1	23,75	25,25	75	56,26	60	18,8	22,5	28,2
A40U80	80:1	2°10'	0,75	1	19,9	21,4	80	60,1	64	20,1	24,1	30,1
A40U90	90:1	2°22'	0,7	1	16,95	18,35	90	63,05	67	19,1	22,9	28,6

All worms and worm gears stocked right hand only.
Worm made of case hardened and ground steel (HV 620 - 700). Lead content is ≤0.1 percent by weight.
Worm gear made of CuZn37Mn3Al2Si. Lead content is ≤0.1 percent by weight.
On request worm gears can be made of plastic or HGW 2083.

Framo Morat GmbH & Co. KG Tel.: +49 (0) 7657 / 88-0 www.framo-morat.com
Franz-Morat-Straße 6 ▪ D-79871 Eisenbach Fax: +49 (0) 7657 / 88-333 info@framo-morat.com